A00843 - 843 CARB. SHB 22 17B

CARBURETOR SPARE PARTS FILE

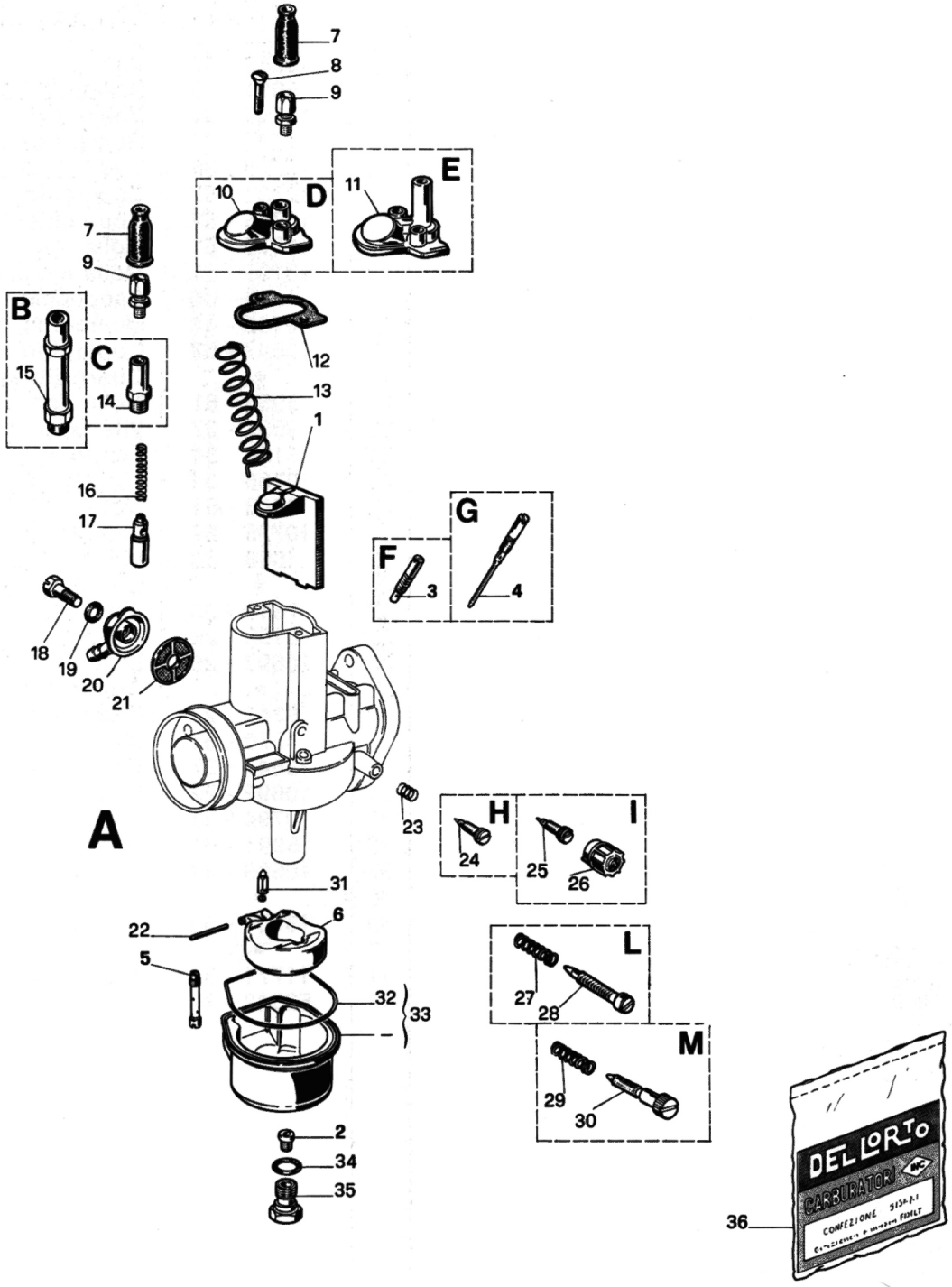

N°	Part Number	Description	Qty
0	A00843	843 CARB. SHB 22 17B	1
1	B09778.001	9778 SLIDE 1	1
2	B09200.090	9200 JET 90	1
4	B09879.055	9879 JET 55	1
5	B06217.070	6217 JET 70	1
6	B06289.001	6289 FLOAT 1 gr. 6	1
8	B04686	4686 SCREW	2
9	B08931	8931 SCREW	1
11	B09003	9003 VALVE COVER	1
13	B05954	5954 SPRING	1
15	B08574	8574 PLUG	1
16	B03133	3133 SPRING	1
17	B07595	7595 STARTER VALVE	1
18	B04568	4568 SCREW	1
20	B07818	7818 FUEL PIPE	1
21	B06109	6109 FUEL FILTER	1
22	B06247	6247 PIN	1
23	B01411	1411 SPRING	1
25	B09881	9881 SCREW	1
26	B09905	9905 KNOB	1
29	B09383	9383 SPRING	1
30	B09384	9384 SCREW	1
31	B08080	8080 FUEL BLANKING NEEDLE	1
33	B13504	13504 BOWL	1
35	B11771	11771 PLUG	1
36	B52543	52543 GASKET KIT SHB 22...B-25-27-27...AA	1